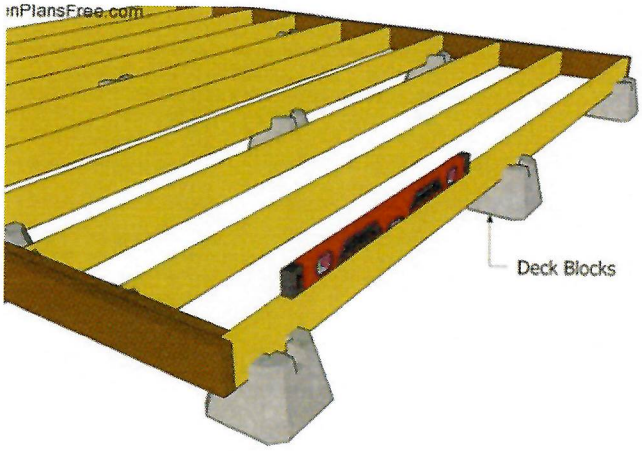
nPlansFree.com
Deck Blocks

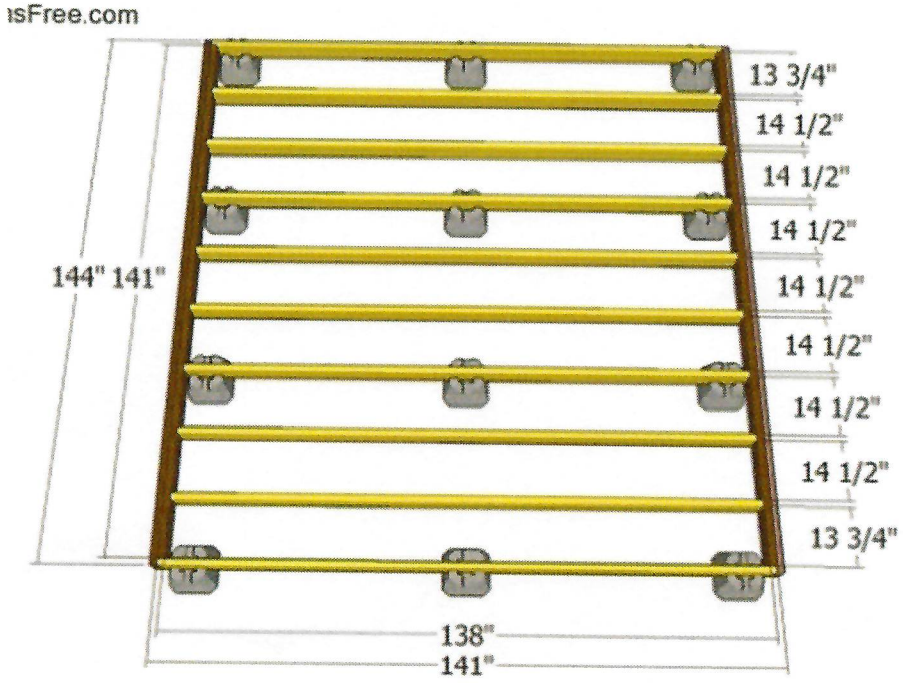
sFree.com
13 3/4"
14 1/2"
14 1/2"
14 1/2"
14 1/2"
14 1/2"
14 1/2"
14 1/2"
13 3/4"
144" 141"
138"
141"

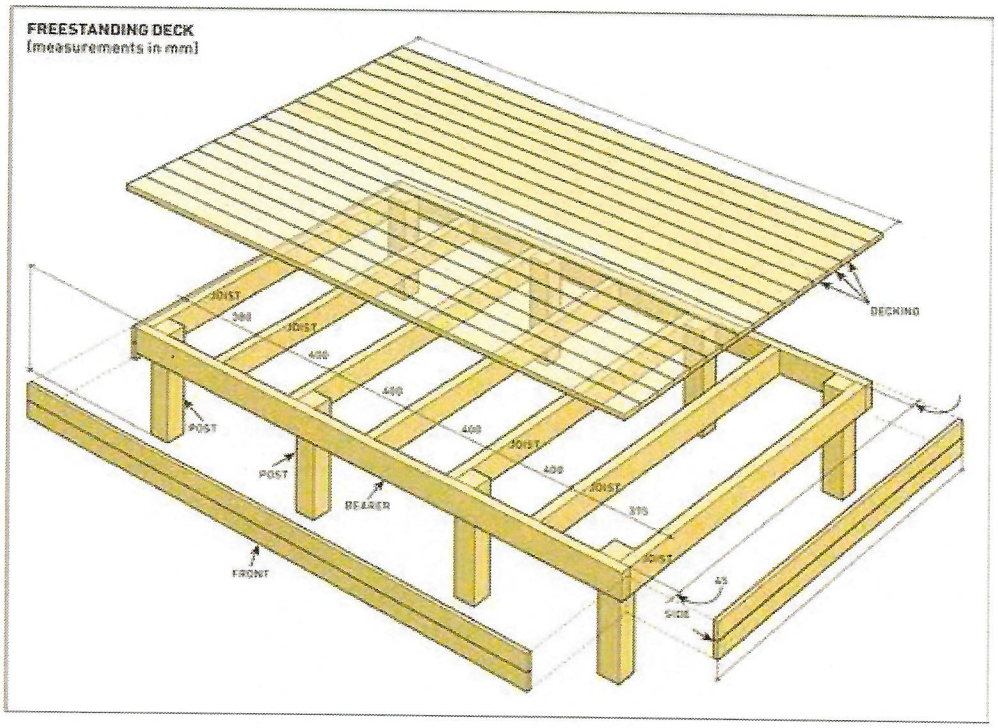
FREESTANDING DECK
(measurements in mm)
JOIST
300
JOIST
400
400
400
JOIST
400
JOIST
375
JOIST
45
SIDE
DECKING
POST
POST
BEARER
FRONT

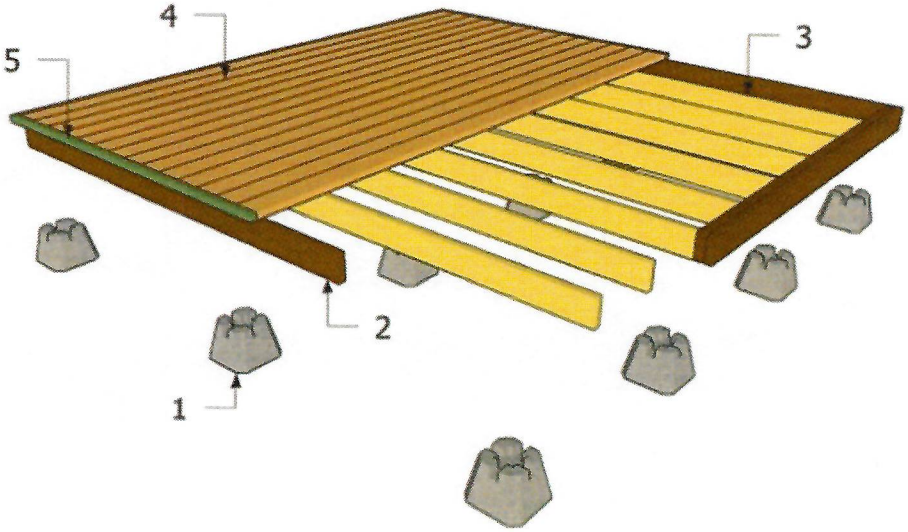
4
5
3
2
1